Bandhours

Frenk 80D
Frenk 90D
Frenk 100D

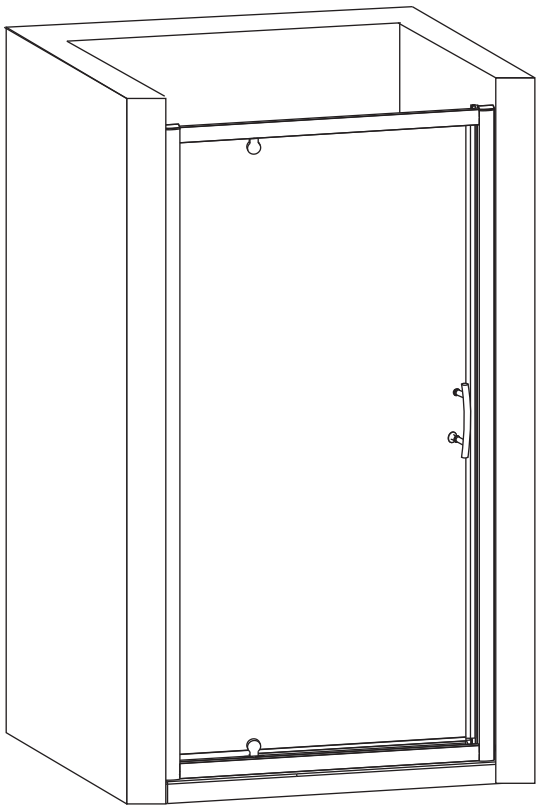

80x190CM 90x190CM 100x190CM

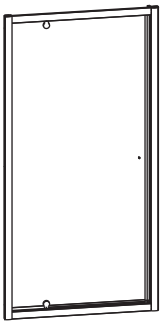

[01] x 1

[04] x 2

[06] x 3

[08] x 6

[09] x1

[10]d x 1

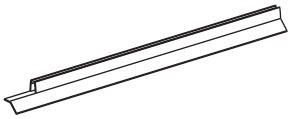

[10]e x 1

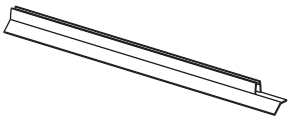

[10]fx 1

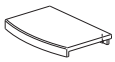

[13]a x 1

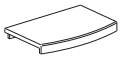

[13]b x 1

[13]c x 2

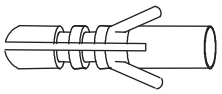

[14] x 6

(St4x12mm)

[17] x6

(St4x30mm)

[18] x 6

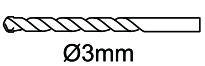

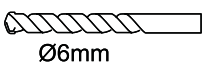

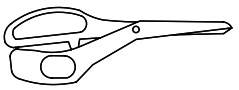

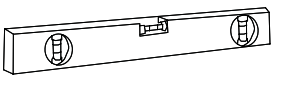

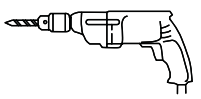

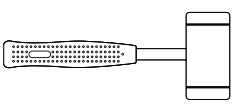

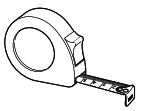

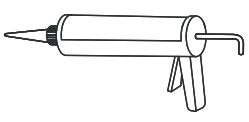

01

	Min. & Max
Frenk 80D	785--825mm
Frenk 90D	885--925mm
Frenk 100D	985--1025mm

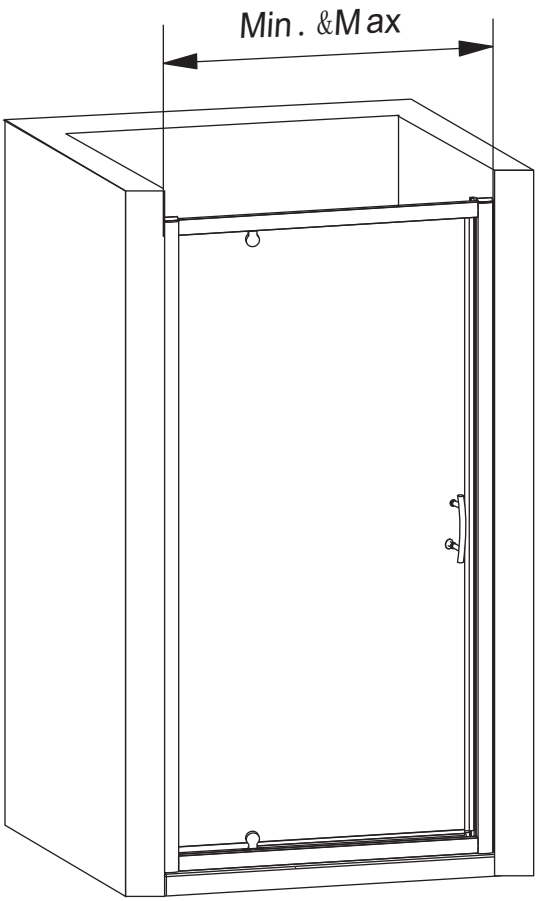

02

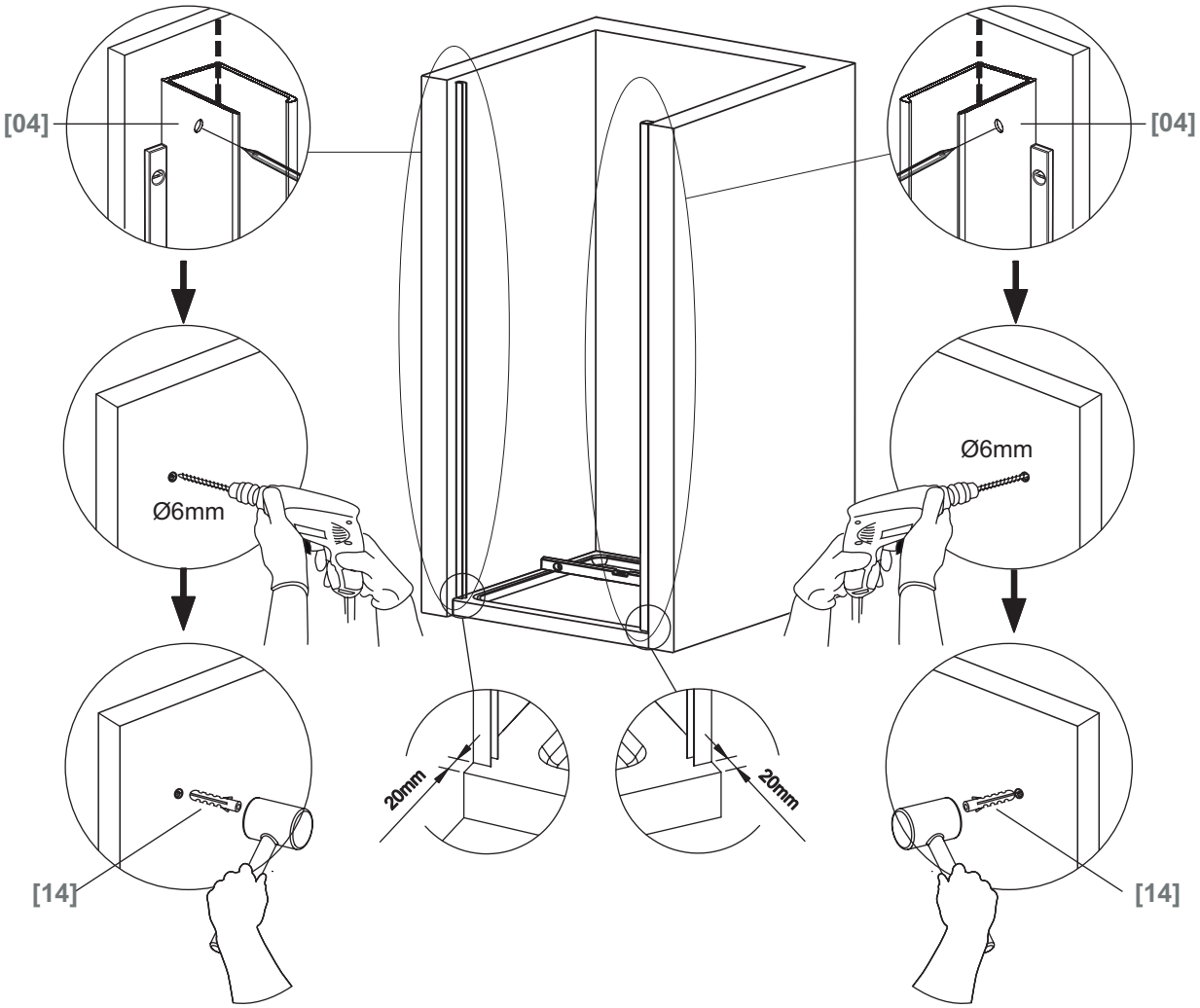

[04] x 2

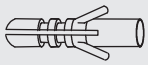

[14] x 6

03

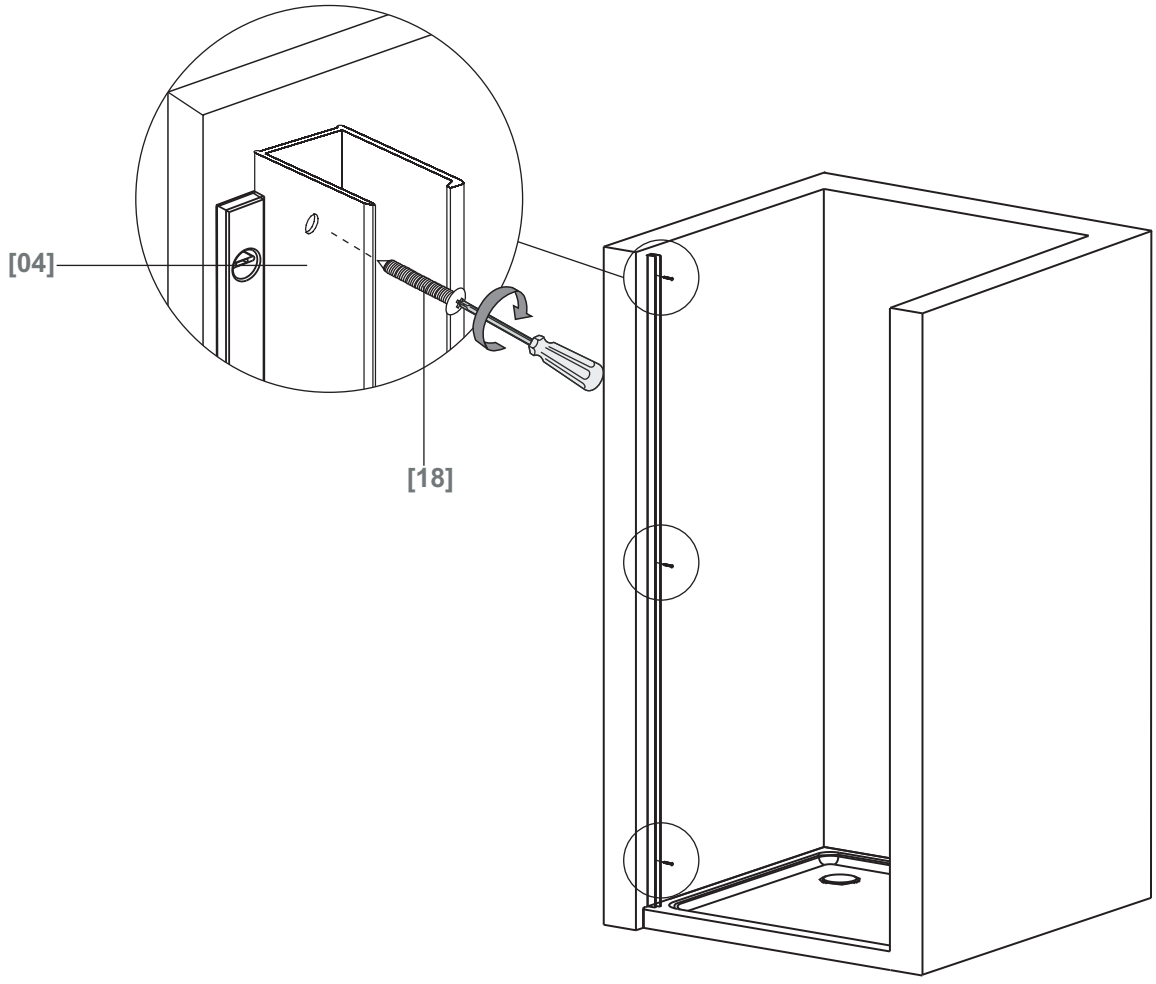

[04] x 1

(St4x30mm)

[18] x 3

04

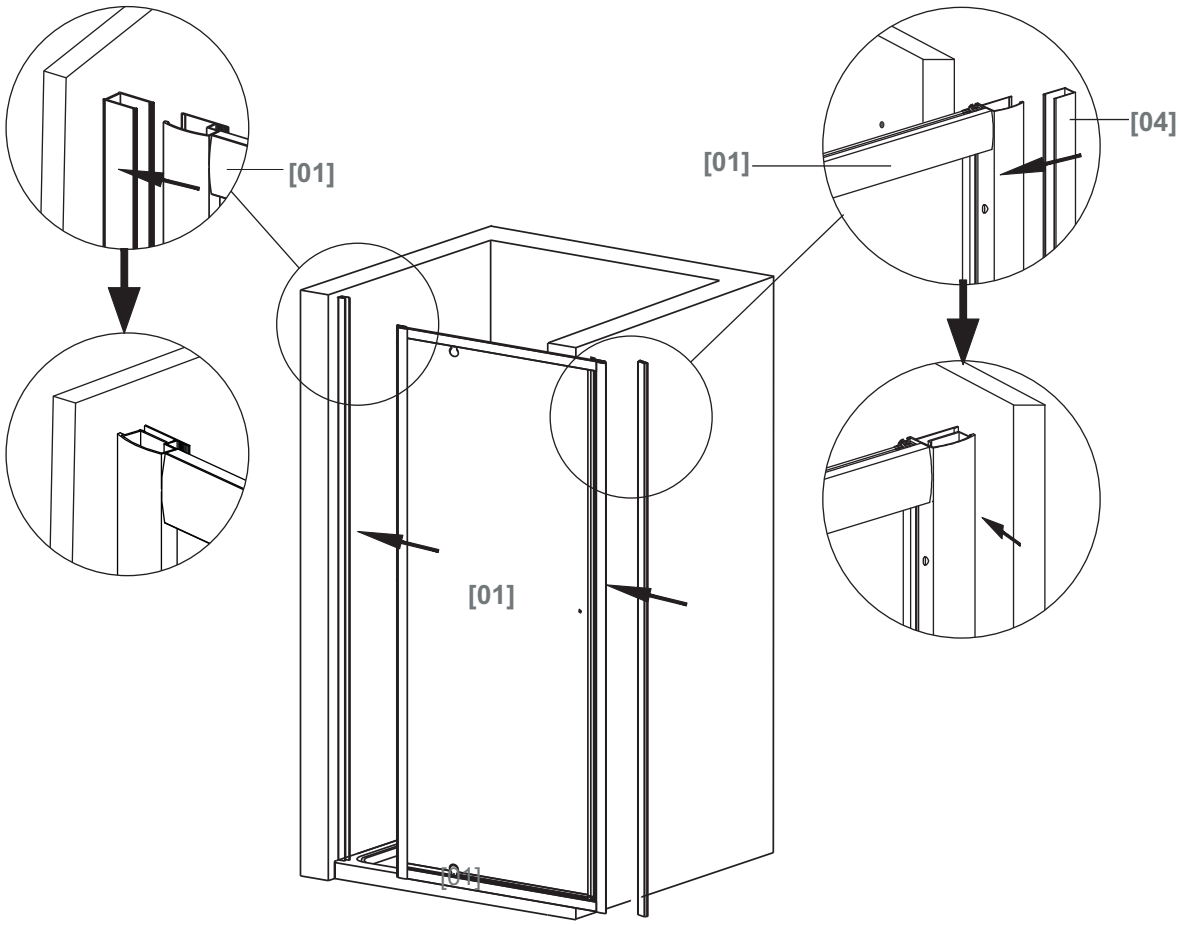

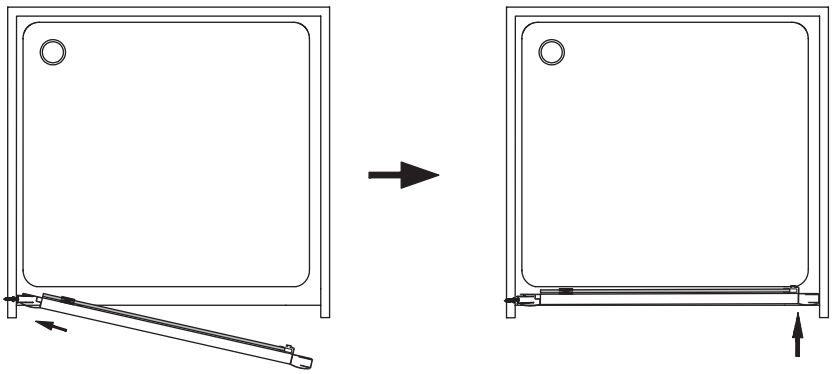

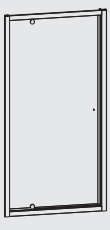

[01] x 1

[04] x 1

05

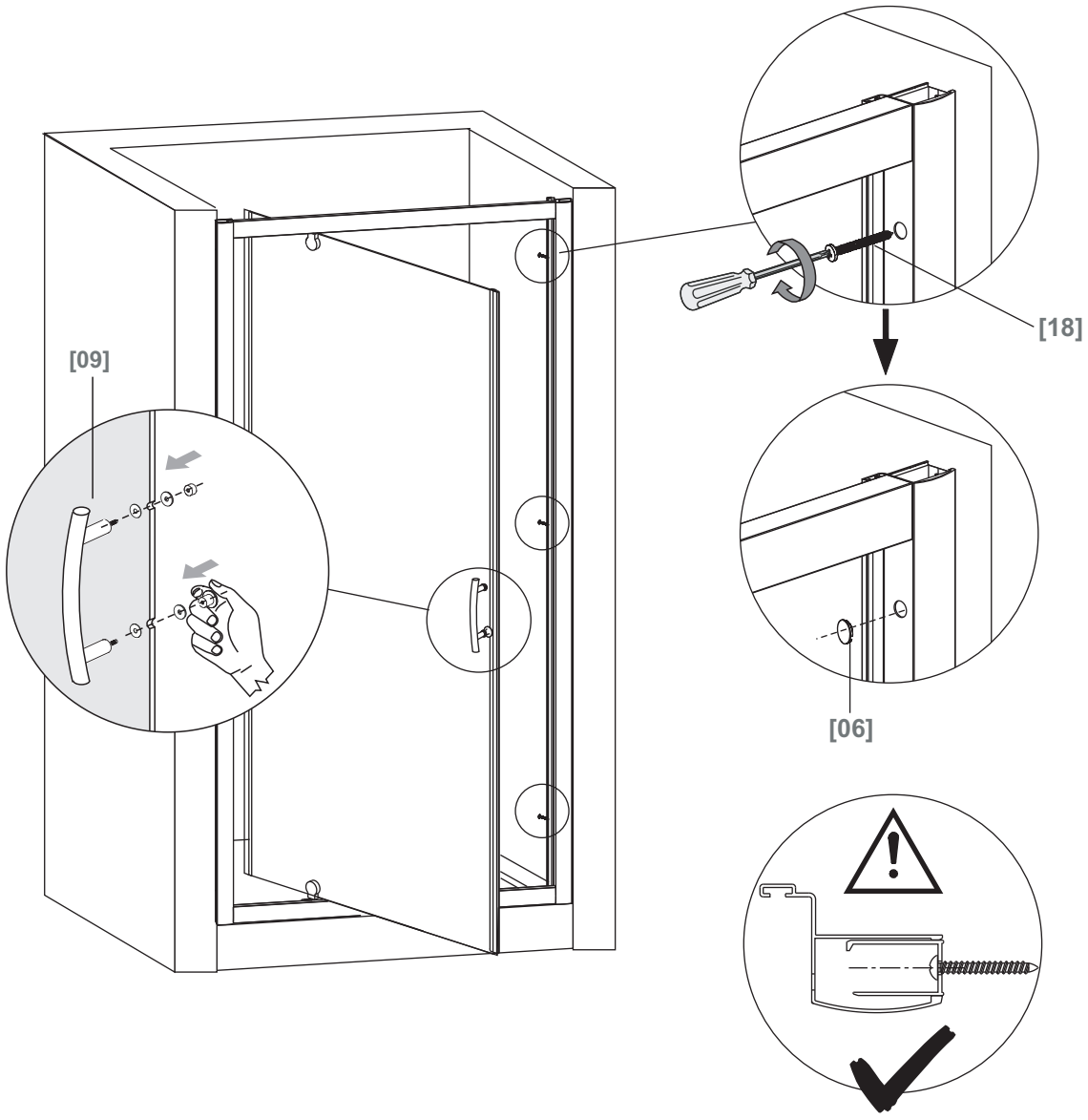

[06] x 3

(St4x30mm)

[18] x 3

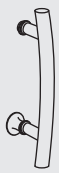

[09] x1

06

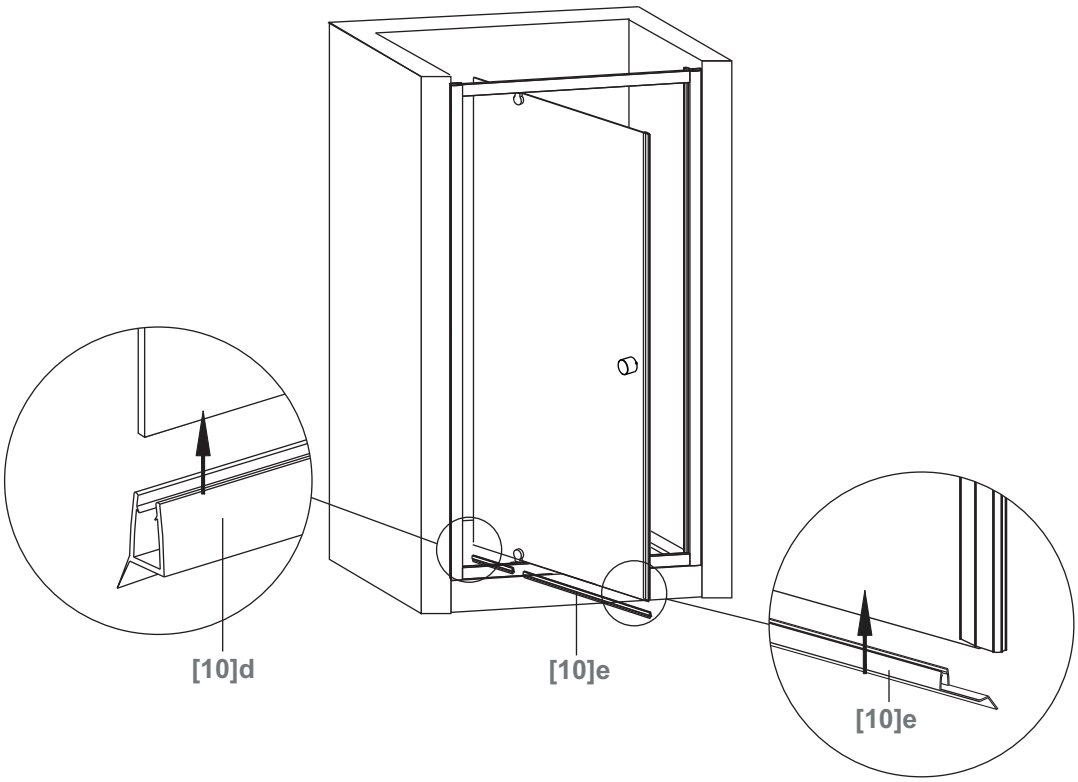

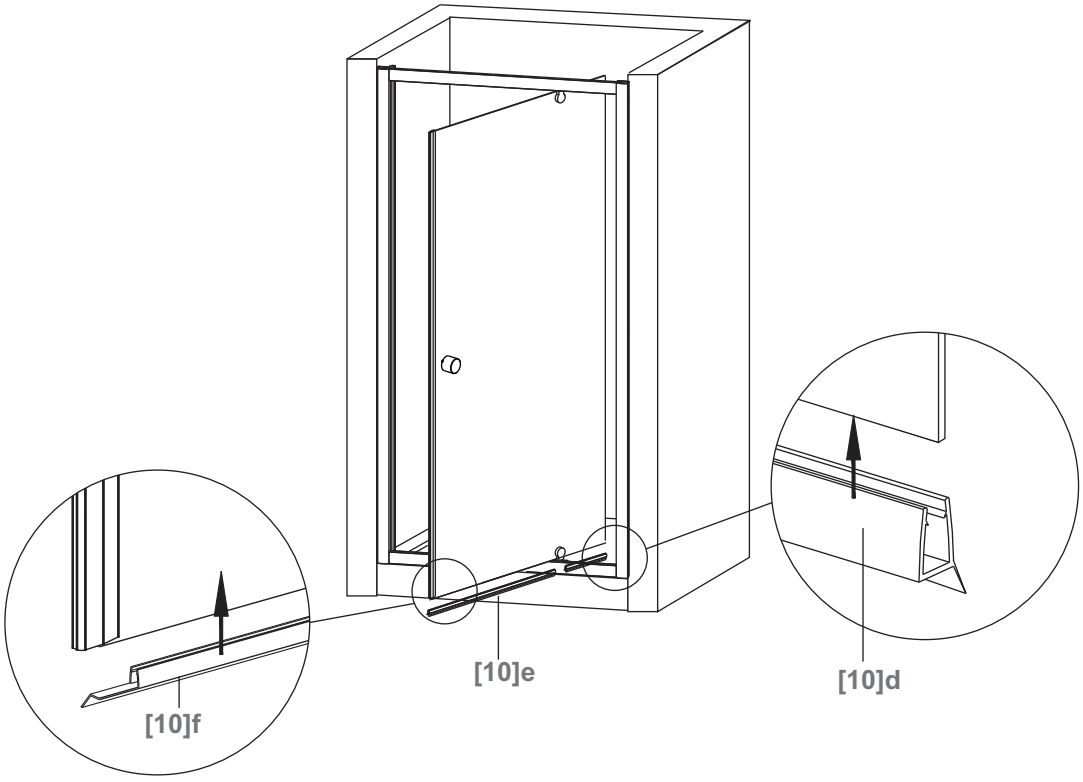

[10]d x 1

[10]e x 1

[10]fx 1

07

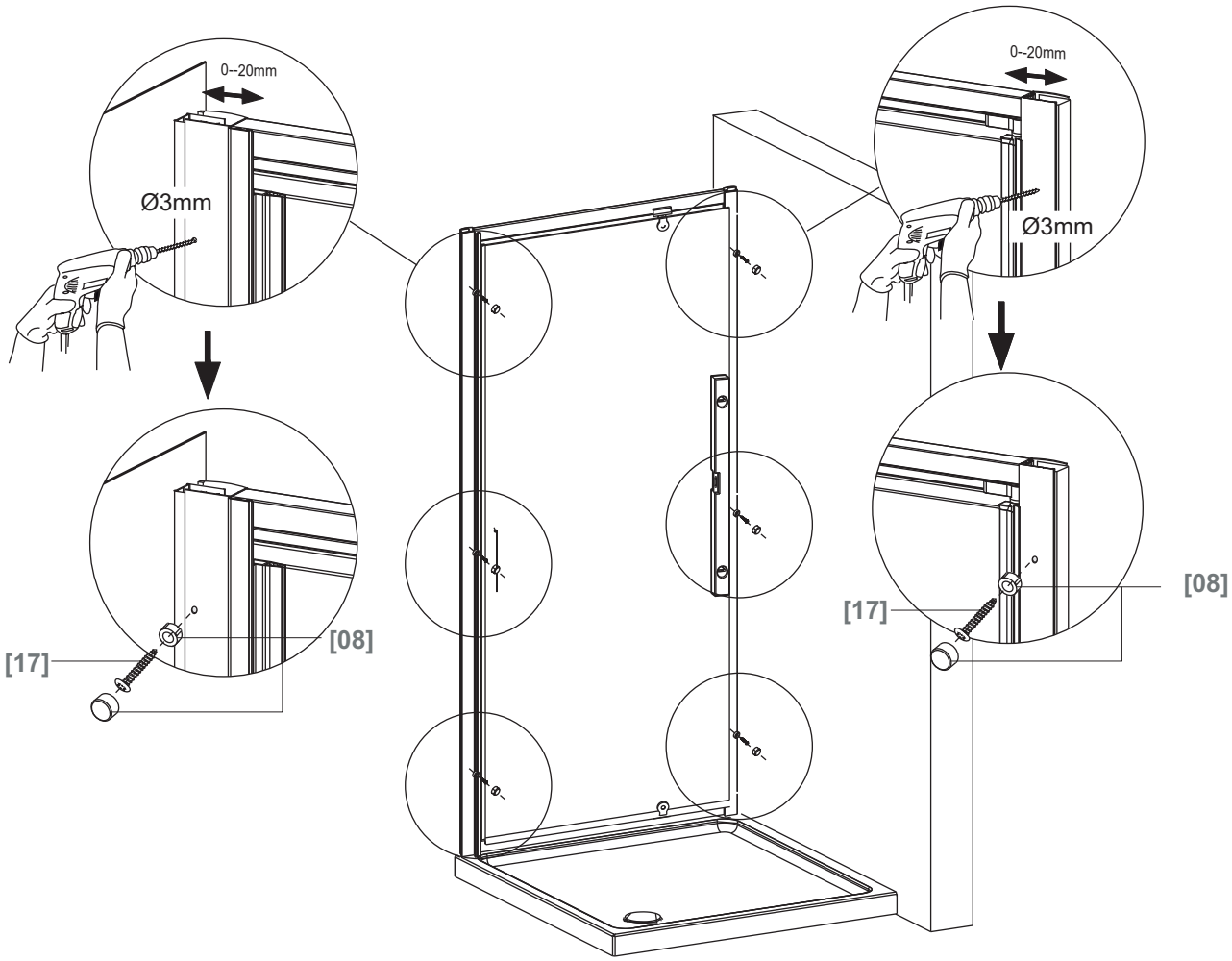

[08] x 6

(St4x12mm)

[17] x6

08

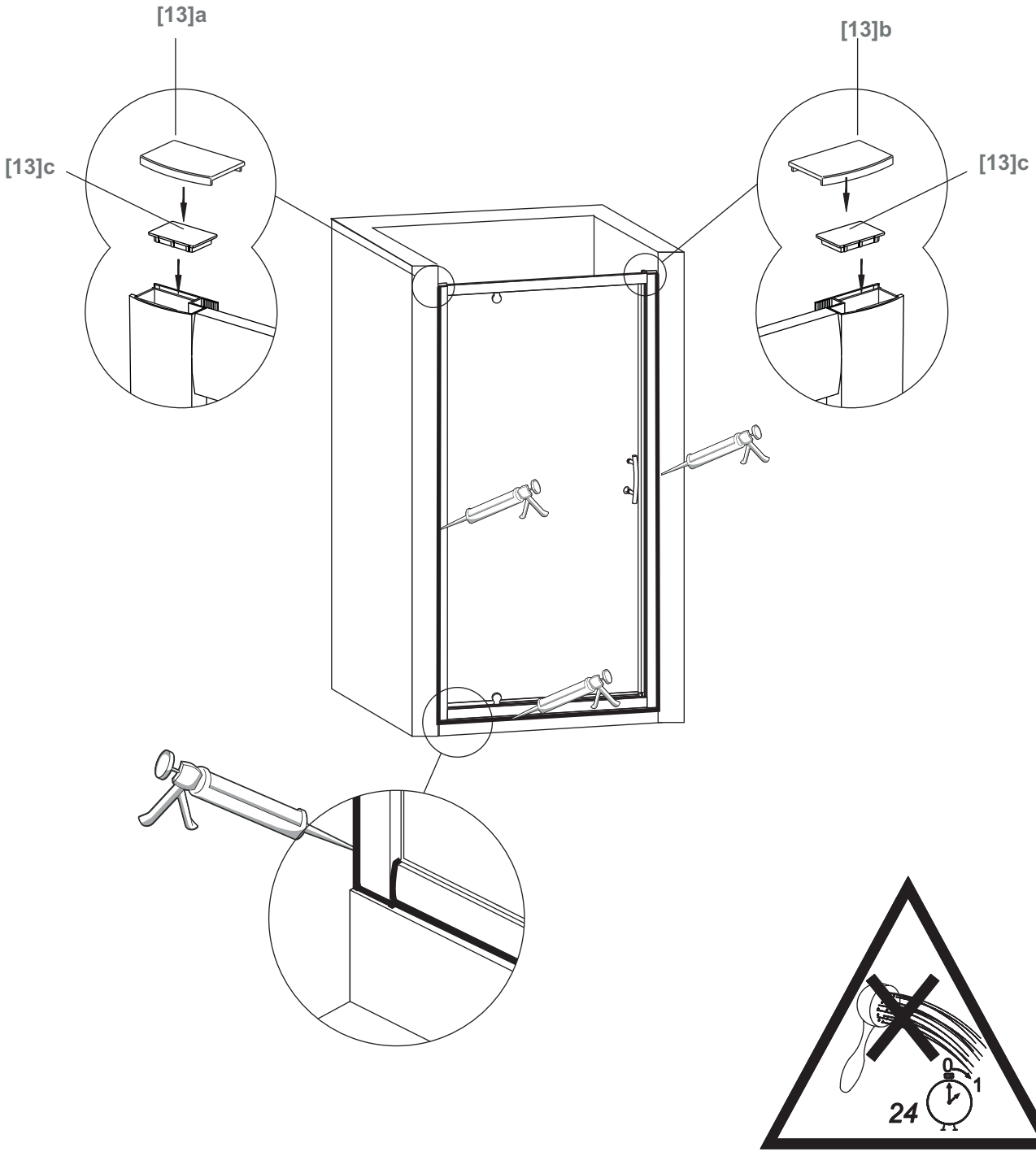

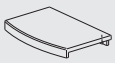

[13]a x 1

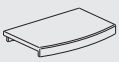

[13]b x 1

[13]c x 2